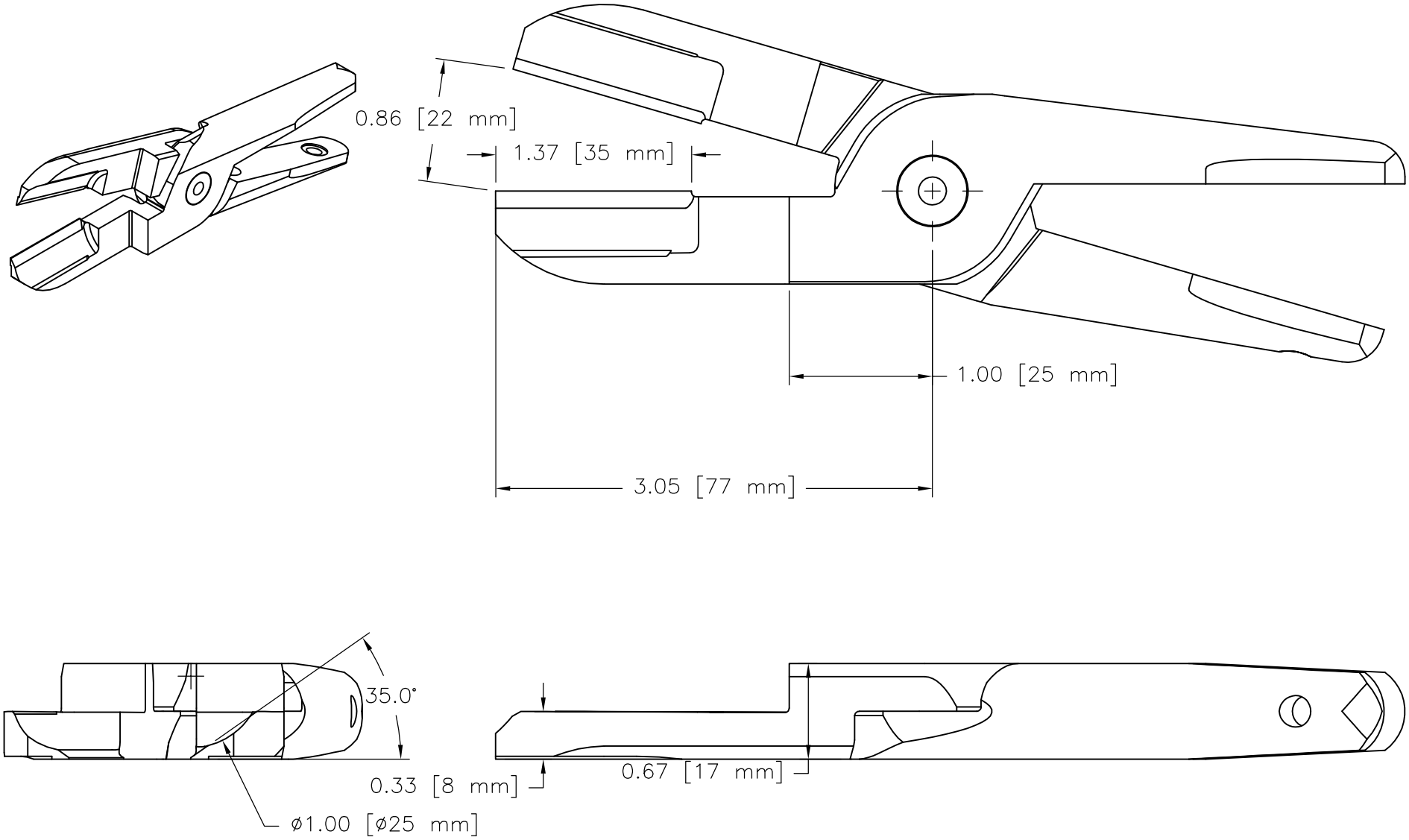

NOTES:
DIMENSIONS ARE APPROXIMATE
±.05 UNLESS SPECIFIED AS
CRITICAL

#	DESCRIPTION	DATE	APPROVED
A0	RELEASE	12/09/2009	kbaer
		30LIR	

#	DESCRIPTION	DATE	APPROVED

ISSUED
ISSUE DATE
WEIGHT

This data, drawing, and information on this document are the sole intellectual property of Swanstrom Tools USA Inc. It is confidential and may not be reproduced, used, or disclosed without prior written permission of an officer of STUSA.

TOLERANCES except as noted
DECIMAL +/- Noted
ANGULAR +/- 1°
FORGE CODE 30P

Swanstrom Tools USA
STUSA
3300 James Day Avenue Superior, WI 54880-5527
BUS. PH. 715-392-9231
FAX 715-392-9233

This is a CAD generated drawing. Do not alter manually.

DRAWN	12/09/2009	kbaer
CHECK		
APPR.		

TITLE SIZE 30 LONG INLINE RELIEVED GPT-30-LIR FINISHED DRAWING

DIE I.D. 30P
SCALE 1:1 (SWAN)
DATE 12/09/2009
DWG NO 30LIR
FILE NAME G:\DRAWINGS\PNEUMATIC\heads\30P\30LIR.DWG
REV
SHEET