NOTES:

CROTCH RELIEF WITH .030 R CUTTER

35° POCKET USE 60° APPROACH ANGLE

LEAVE ABOUT .065 FLAT ON EDGE

BELT "FLATBACK" WITH 10.5 RADIUS PLATTEN.

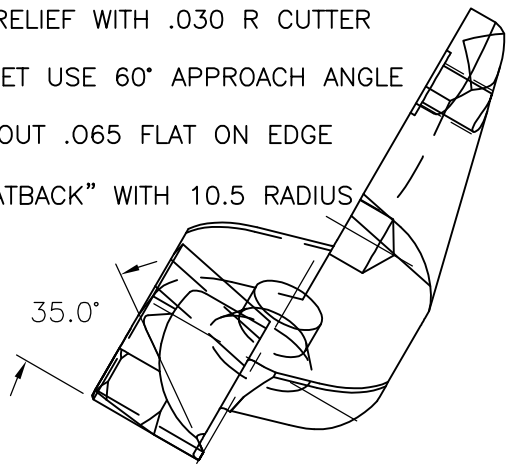


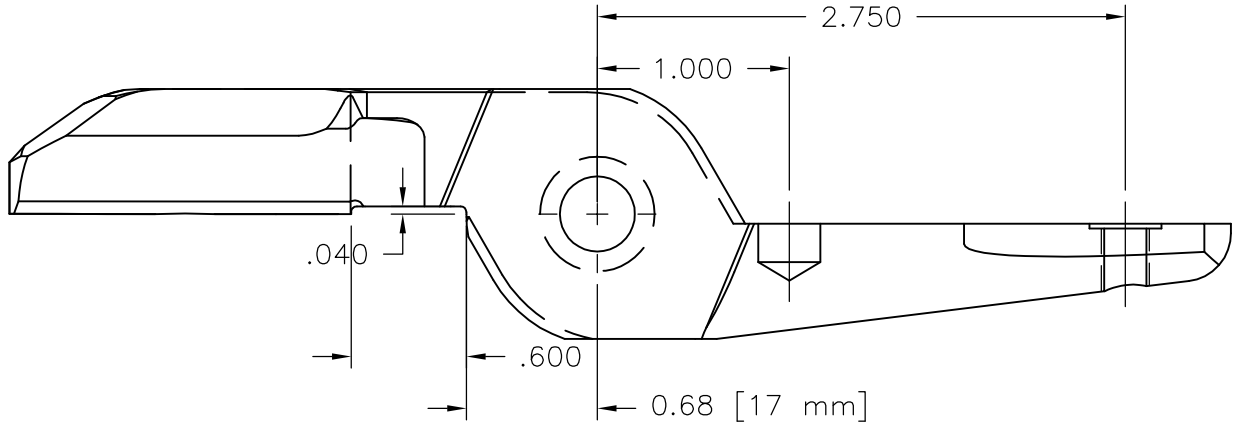


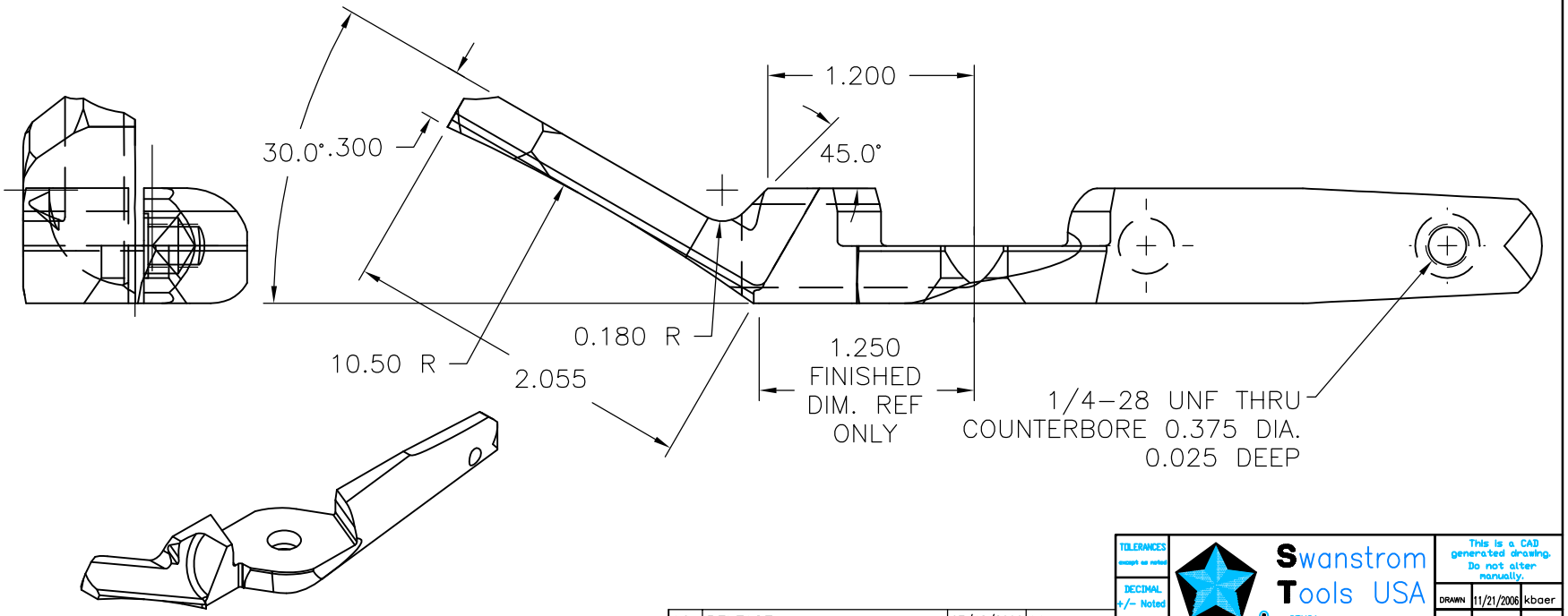


| # | DESCRIPTION | DATE | APPROVED |
|---|---|---|---|
| A0 | RELEASE | 07/18/2006 30LC | kbaer |

ISSUED
ISSUE DATE
WEIGHT

This data, drawing, and information on this document are the sole intellectual property of Swanstrom Tools USA Inc. It is confidential and may not be reproduced, used, or disclosed without prior written permission of an officer of STUSA.

TOLERANCES except as noted
DECIMAL +/- Noted
ANGULAR +/- 1°
FORGE CODE 30P
DIE I.D. 30P

Swanstrom Tools USA
STUSA
3300 James Day Avenue Superior, WI 54880-5527
BUS. PH. 715-392-9231
FAX 715-392-9233

This is a CAD generated drawing. Do not alter manually.

| | | |
|---|---|---|
| DRAWN | 11/21/2006 | kbaer |
| CHECK | | |
| APPR. | | |

TITLE SIZE 30 DEEP 45° ANGLE CUTTER
GPT-30-DA45 MACHINE DRAWING

SCALE 1:1 (SWAN)
DATE 11/21/2006
DWG_NO 30DA45
FILE NAME C:\DRAWINGS\PNEUMATIC\heads\30P\30DA45.DWG
REV A1
SHEET