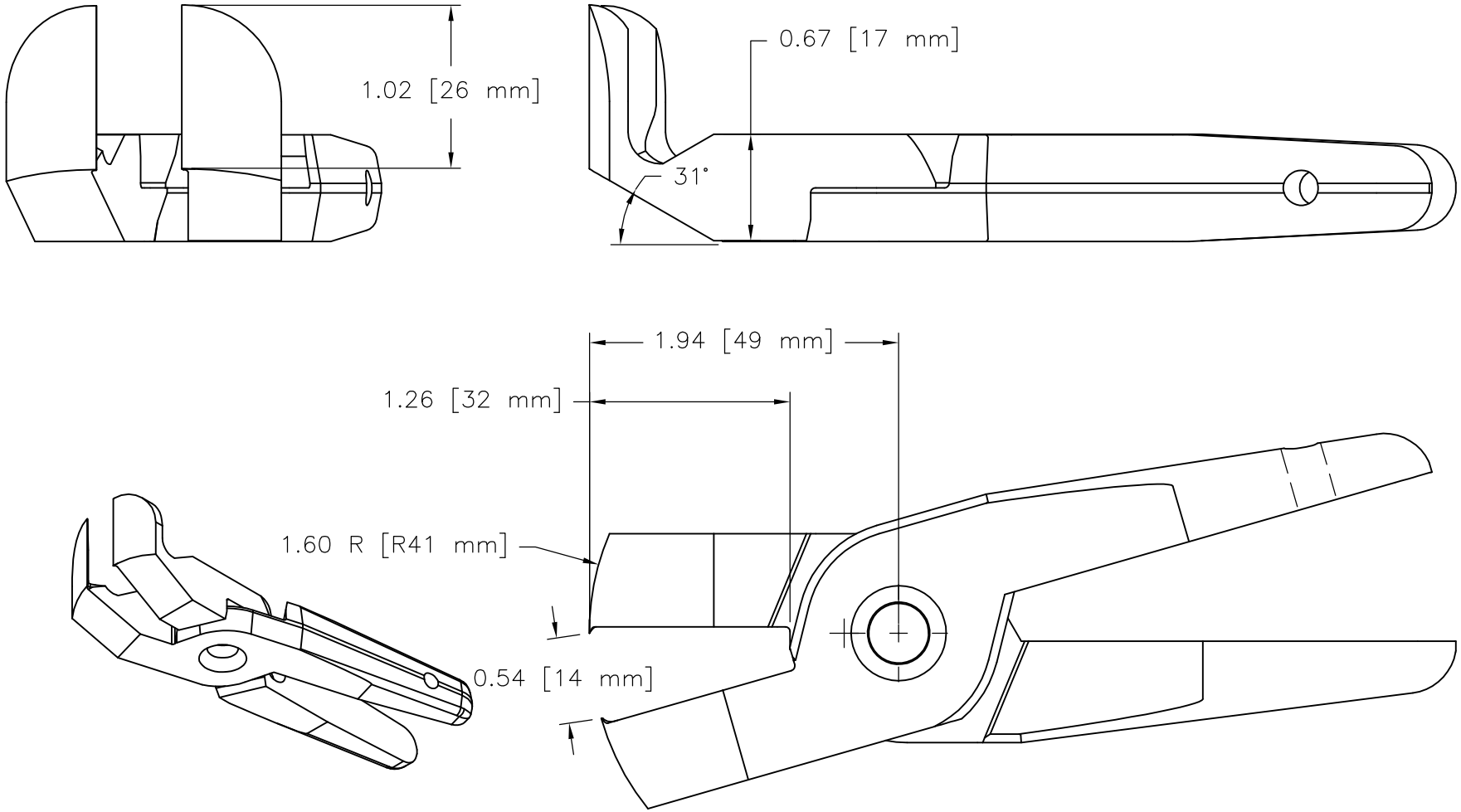

NOTES:
DIMENSIONS ARE APPROXIMATE
±.05 UNLESS SPECIFIED AS
CRITICAL

#	DESCRIPTION	DATE	APPROVED
A0	RELEASE	06/09/2006 30DA90-1	kbaer

ISSUED
ISSUE DATE
WEIGHT

This data, drawing, and information on this document are the sole intellectual property of Swanstrom Tools USA Inc. It is confidential and may not be reproduced, used, or disclosed without prior written permission of an officer of STUSA.

TOLERANCES except as noted
DECIMAL +/- Noted
ANGULAR +/- 1°
FORGE CODE 30P
DIE I.D. 30P

Swanstrom Tools USA
STUSA
3300 James Day Avenue Superior, WI 54880-5527
BUS. PH. 715-392-9231
FAX 715-392-9233

This is a CAD generated drawing. Do not alter manually.

DRAWN	05/30/2006	kbaer
CHECK		
APPR.		

TITLE BENT 30-DA90 LIKE OLD STYLE 20-DA90 FINISHED DRAWING

SCALE 1:1 (SWAN)
DATE 05/30/2006
DWG_NO 30DA90-1
FILE NAME C:\DRAWINGS\PNEUMATIC\heads\30P\30DA90-1.DWG
REV
SHEET