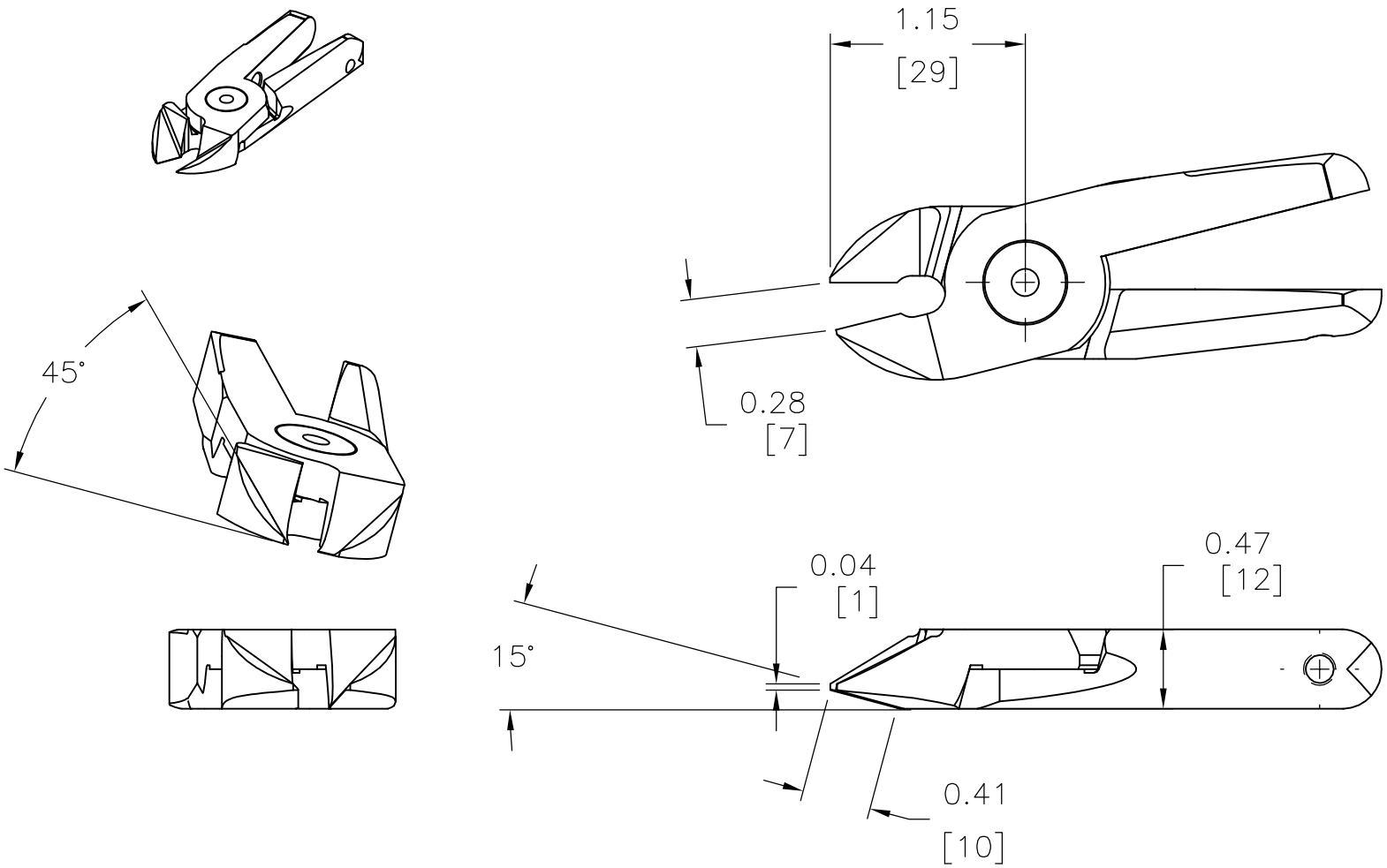

REV. NO	DATE	REVISION RECORD	ENG	ENG	QM	GM	SM	

This data, drawing, and information on this document are the sole intellectual property of Swanstrom Tools USA Inc. It is confidential and may not be reproduced, used, or disclosed without prior written permission of an officer of STUSA.

TOLERANCES except as noted
DECIMAL +/- Noted
ANGULAR +/- 1°

Swanstrom Tools USA ®
STUSA
3300 James Day Avenue Superior, WI 54880-5527
BUS. PH. 715-392-9231
FAX 715-392-9233

This is a CAD generated drawing. Do not alter manually.

DR. BY: KDB
CH'D. BY:

FORGE CODE: 9P
TITLE: GPM-10-609 FINISHED DRAWING
DIE I.D.
SCALE: 1:1
DATE: 9-13-11
DRAWING NUMBER: GPM-10-609
REV.: A0

G:\DRAWINGS\PNEUMATIC\heads\9P\GPM-10-609.dwg, Layout1 (2), 9/13/2011 2:03:53 PM